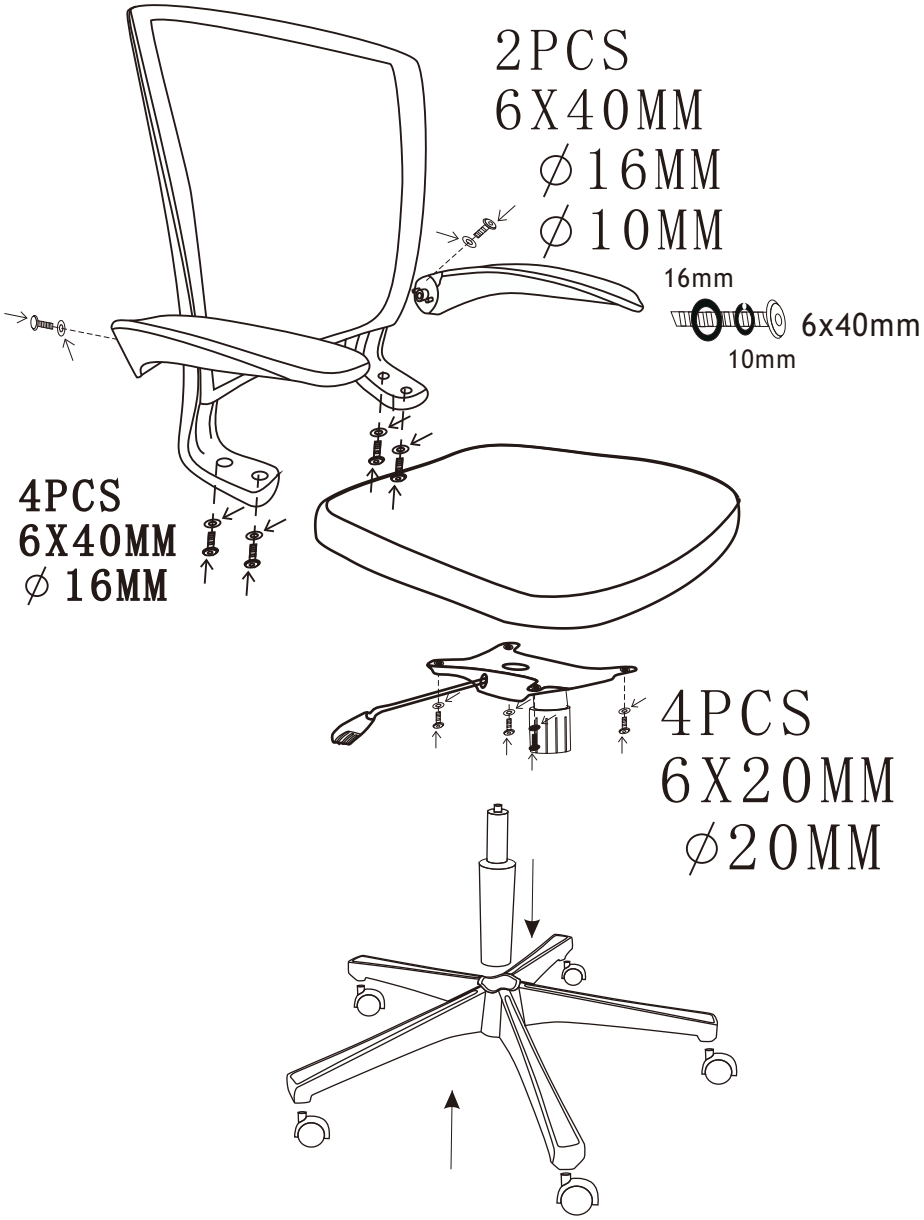
2PCS
6X40MM
∅16MM
∅10MM
16mm
6x40mm
10mm
4PCS
6X40MM
∅16MM
4PCS
6X20MM
∅20MM

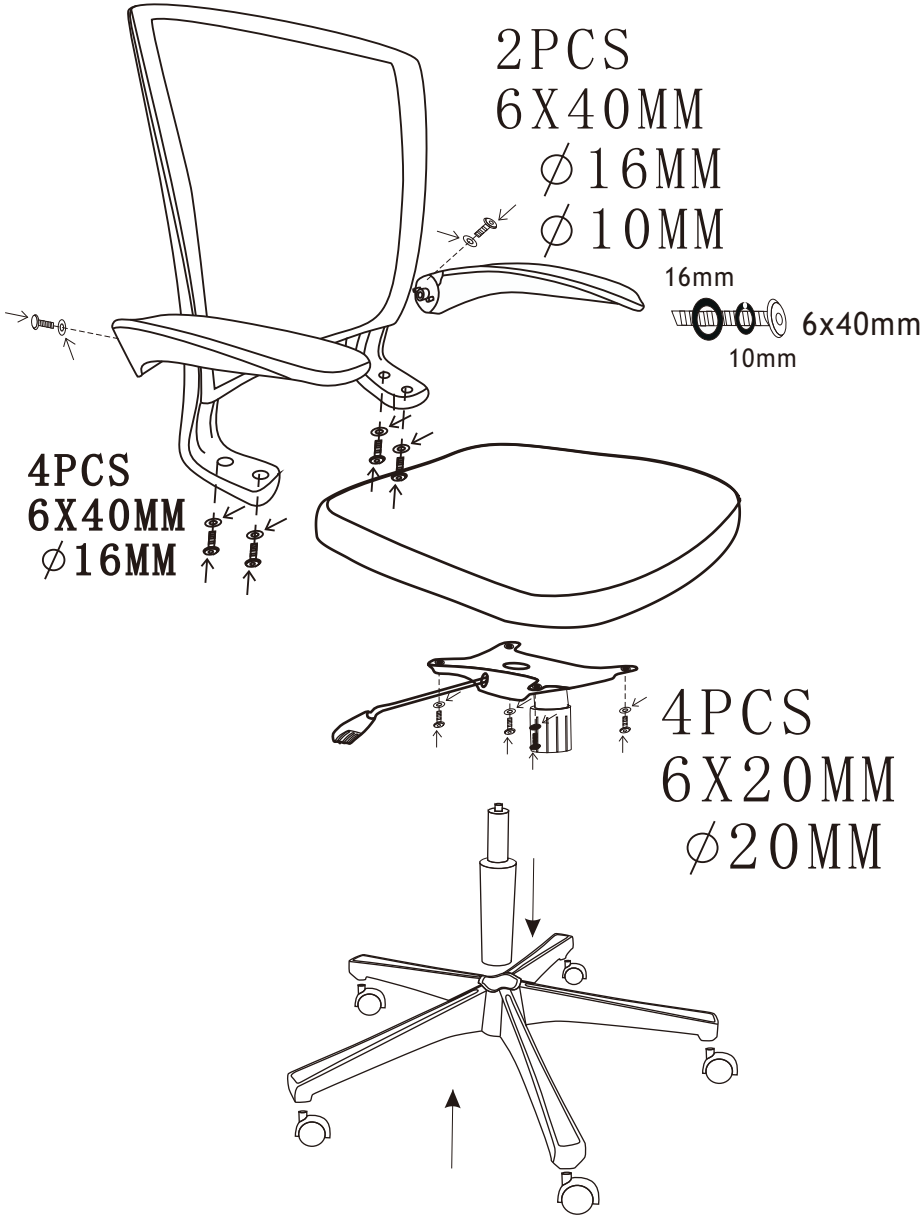
2PCS
6X40MM
∅16MM
∅10MM
16mm
6x40mm
10mm
4PCS
6X40MM
∅16MM
4PCS
6X20MM
∅20MM