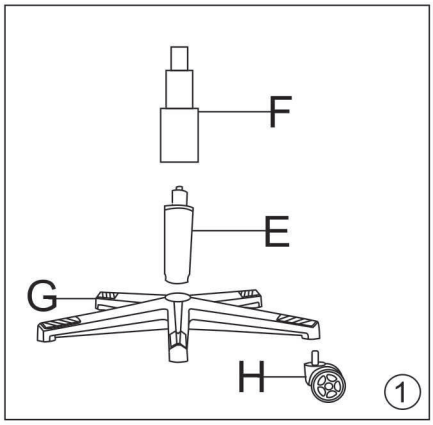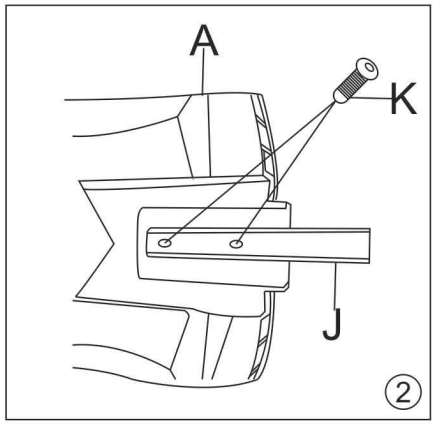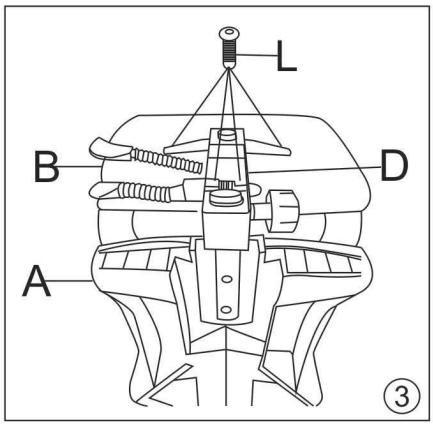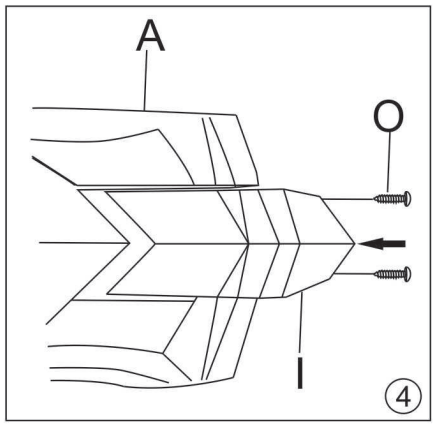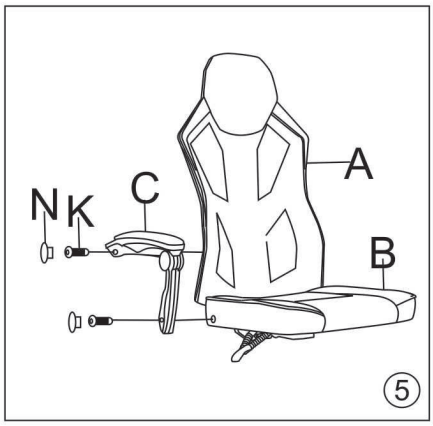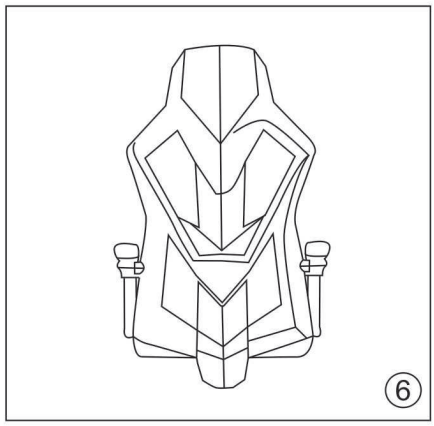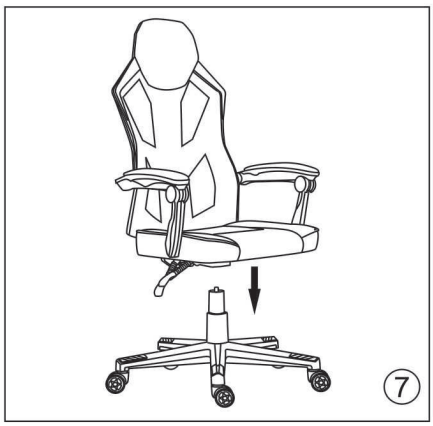Ax1	Ix1
Bx1	Jx1
Cx2	Kx6 M6x30mm
Dx1	Lx4 M6x20mm
Ex1	Mx1
Fx1	Nx4
Gx1	Ox2 5x14mm
Hx5	Px1