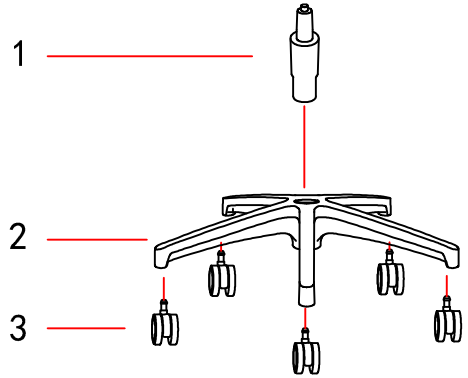

Step 1

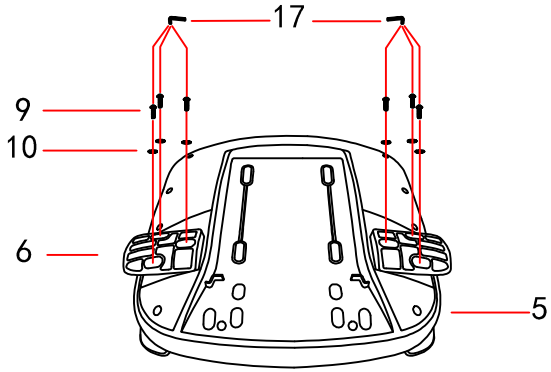

Step 2

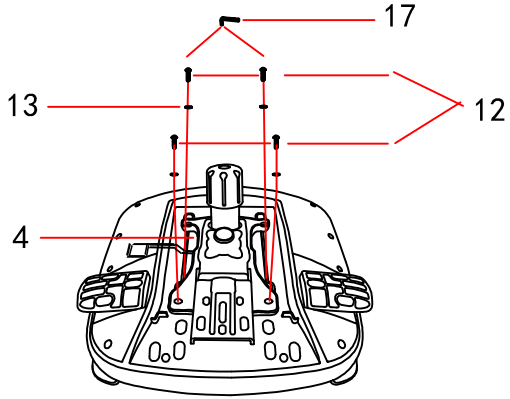

Step 3

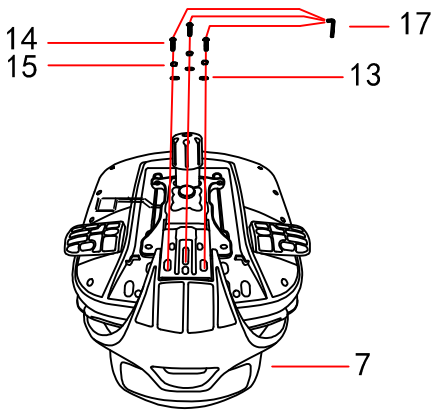

Step 4

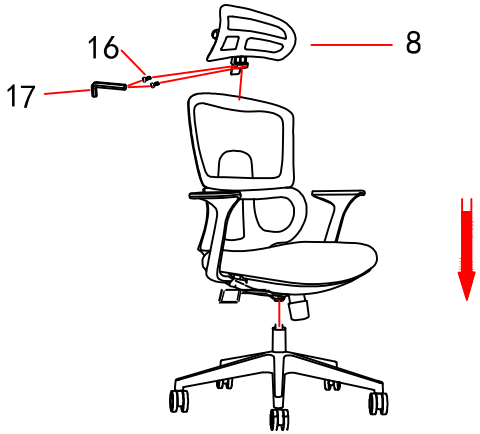

Step 5

Step 6

Q202A -DP	NO.	1	2	3	4	5	6	7	8	9	10		12	13	14	15	16	17	
	SKETCH																		
	SIZE									M6X40MM	M6X15MM		M6X55MM	M8X17MM	M8X20MM	M8X13MM	M6*20mm	M5	
	QTY	1pcs	1pcs	5pcs	1pcs	1pcs	2pcs	1pcs	1pcs	6pcs	6pcs		4pcs	7pcs	3pcs	3pcs	2pcs	1pcs	